CARLOS PRIMERO
ACCP41CR

NOBILI®
The Best Technology for Water

Image

Technical drawing

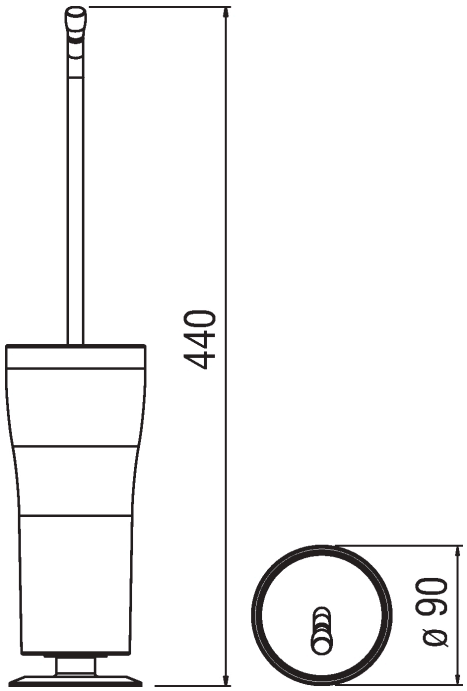

Specifications

Accessories
Brush holder
Finish: Chrome
Free standing
Packaging: 26,7 x 11 x 11 cm / 0,00323 m^3 / 1,14 kg

The article covered by this data sheet may not have all Nobili certificates