HERA
HE24117CR

NOBILI®
The Best Technology for Water

Image

Technical drawing

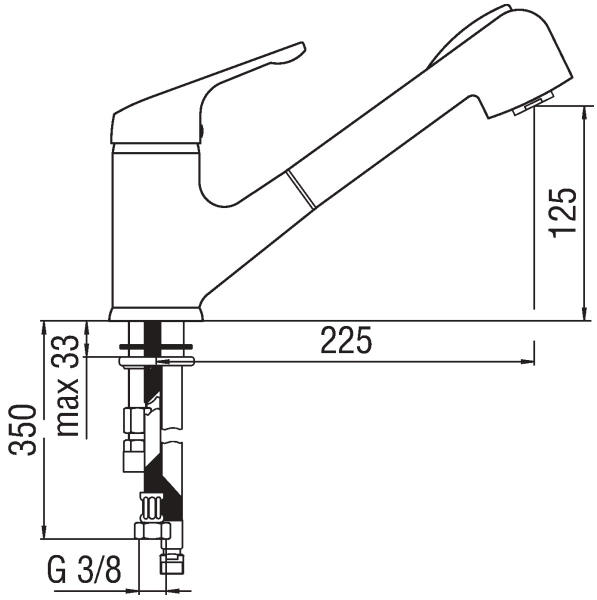

Specifications

Sink
Single control
Finish: Chrome
Swivel spout
Pull-out 2-jet hand shower
Cartridge ø 40 mm
Dynamic flow limiter (-50%)
The temperature limiter
Flexible Parigi® SPX® stainless steel ø 3/8"
Packaging: 56,5 x 20,3 x 7,1 cm / 0,008143 m^3 / 2,66 kg

Flow rate diagram

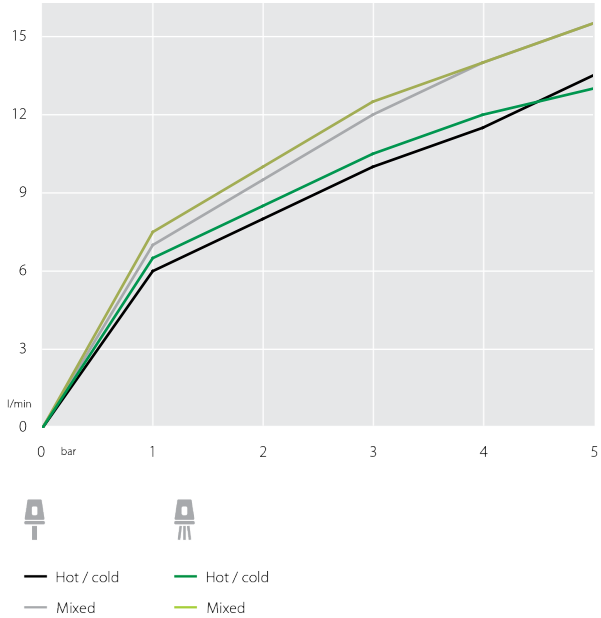

grupponobili.it

The article covered by this data sheet may not have all Nobili certificates