MIA
MI102114CR

NOBILI®
The Best Technology for Water

Image

Technical drawing

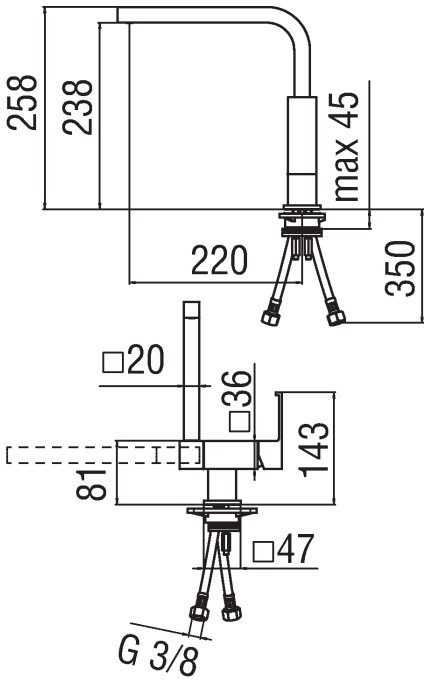

Specifications

Sink
Under window single control
Finish: Chrome
Swivel spout
Tilting spout
Cartridge ø 28 mm
Dynamic flow limiter (-50%)
The temperature limiter
Aerator Neoperl® caché M 16,5 x 1
Flexible Parigi® SPX® stainless steel ø 3/8"
Packaging: 56,5 x 29 x 7,1 cm / 0,011633 m^3 / 2,5 kg

Flow rate diagram

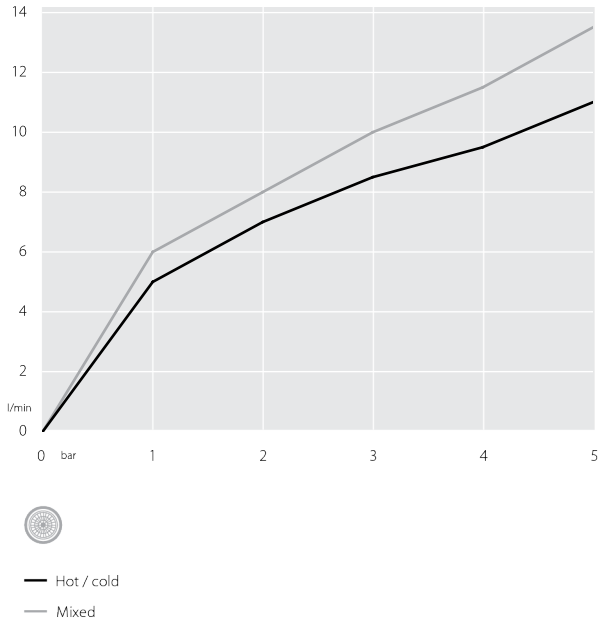

The article covered by this data sheet may not have all Nobili certificates