OZ T2
OZ117/T2CS

NOBILI®
The Best Technology for Water

Image

Technical drawing

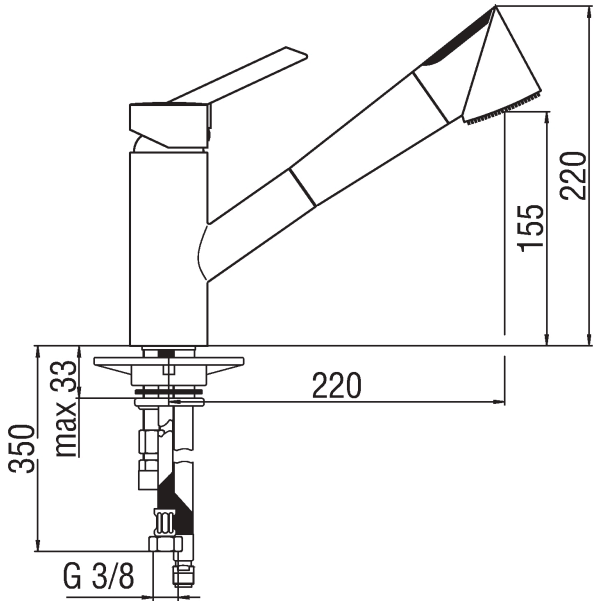

Specifications

Sink
Single control
Finish: Chrome and satin finish
Swivel body
Pull-out 2-jet hand shower
Dynamic flow limiter (-50%)
The temperature limiter
Flexible Parigi® SPX® stainless steel ø 3/8"
Packaging: 41 x 21 x 7 cm / 0,006027 m^3 / 2,3 kg

Flow rate diagram

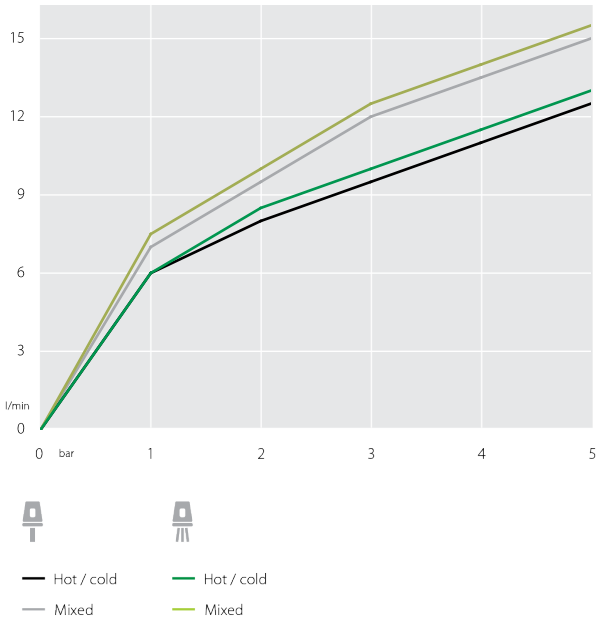

The article covered by this data sheet may not have all Nobili certificates