Ifö Silva base cabinet 112 light grey oak

Light grey oak base cabinet with four soft closing drawers. Textile mats in all drawers. Adjustable wall fittings and water trap are included.

Dimensions H: 470 W: 1125 D: 360

Product	Ifö no.	[RSK_Number]
Ifö Silva base cabinet 112 light grey oak	42730	897 39 60
Ifö Caprice wash basin 2152	21520	761 25 55

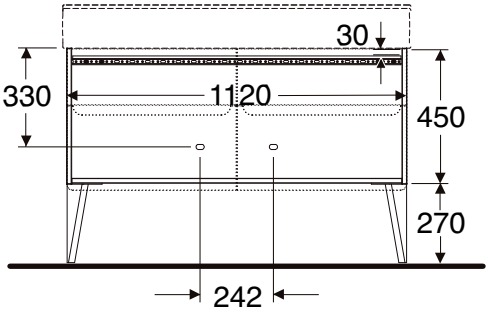

Fits
Ifö Caprice 21520