COMUNITÀ E SANITARI
AS35400/BCR

NOBILI®
The Best Technology for Water

Image

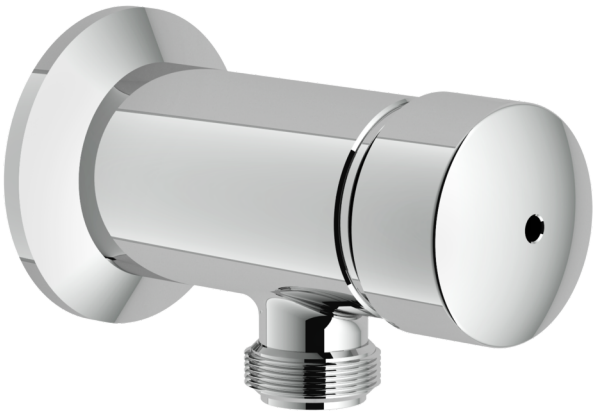

Technical drawing

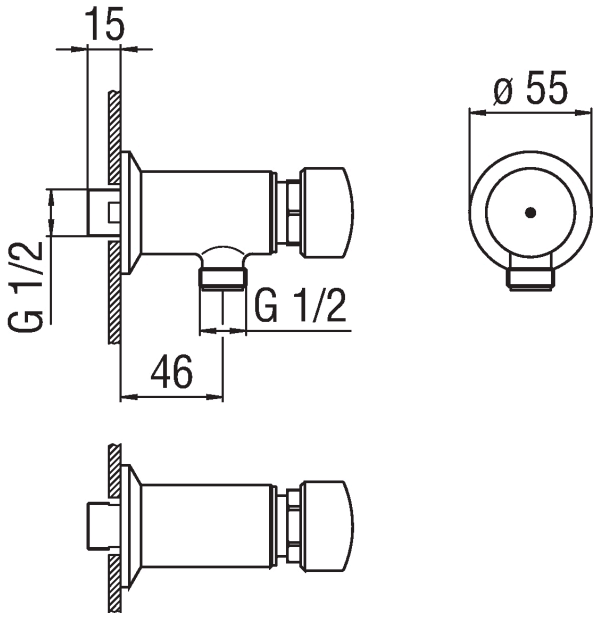

Specifications

Shower
Timed wall mounted tap
Finish: Chrome
1/2" connection
Pushbutton control
15° outflow angle
5 possible outflow rates

The article covered by this data sheet may not have all Nobili certificates