ANTICA
AT31015/1CR

NOBILI®
The Best Technology for Water

Image

Technical drawing

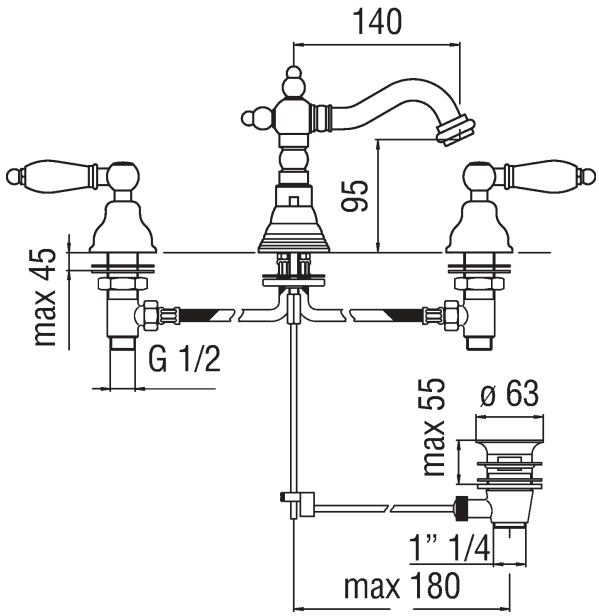

Specifications

Bidet
3-hole set
Finish: Chrome
Swivel spout
Aerator Neoperl® M 22 x 1
Packaging: 61,2 x 26,6 x 9 cm / 0,014651 m^3 / 3,3 kg

The article covered by this data sheet may not have all Nobili certificates