DUBAI
DB00313CR

NOBILI®
The Best Technology for Water

Image

Technical drawing

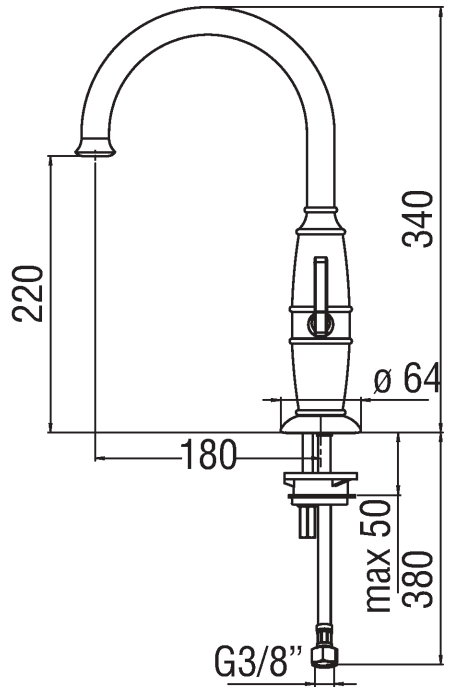

Specifications

Sink
Single control
Finish: Chrome
Swivel spout
Coaxial cartridge ø 35 mm
Energy saving (opening in cold water with central lever position)
Aerator Neoperl® caché M 18,5 x 1
Flexible Parigi® SPX® stainless steel ø 3/8”
Packaging: 56,5 x 29 x 7,1 cm / 0,011633 m^3 / 2,2 kg

Flow rate diagram

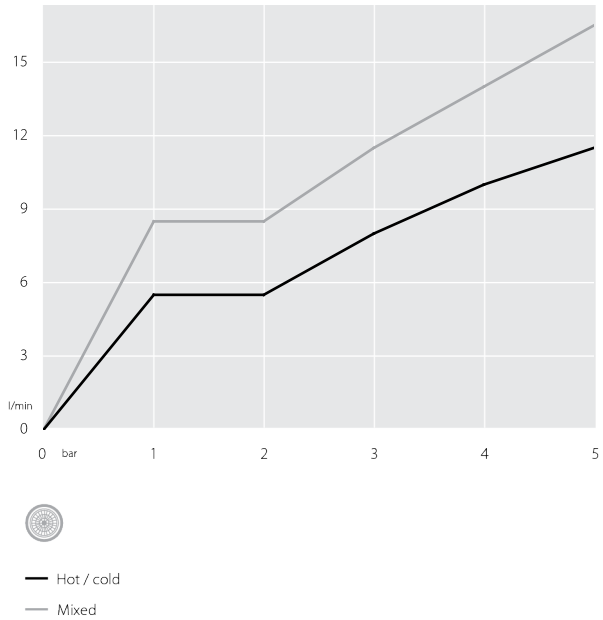

The article covered by this data sheet may not have all Nobili certificates