MIA IX
MI102119/1IX

NOBILI®
The Best Technology for Water

Image

Technical drawing

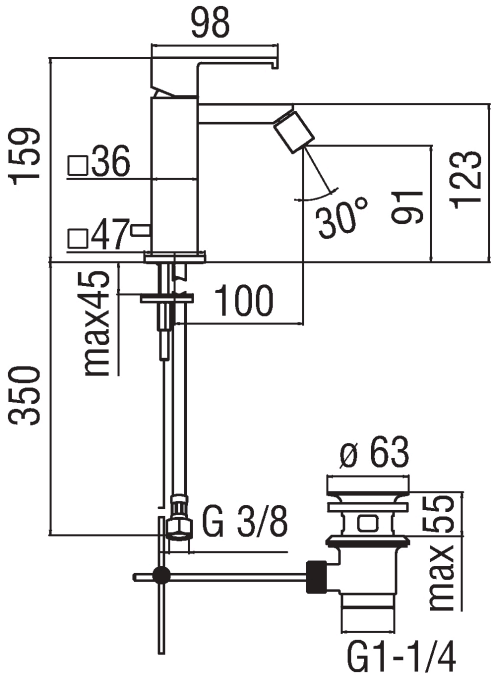

Specifications

Bidet
Single control
Swivel jet
Cartridge ø 28 mm
Dynamic flow limiter (-50%)
The temperature limiter
Aerator Neoperl® caché M 16,5 x 1 with swivel
Flexible Parigi® SPX® stainless steel ø 3/8"
Packaging: 41 x 21 x 7 cm / 0,006027 m^3 / 2,29 kg

Flow rate diagram

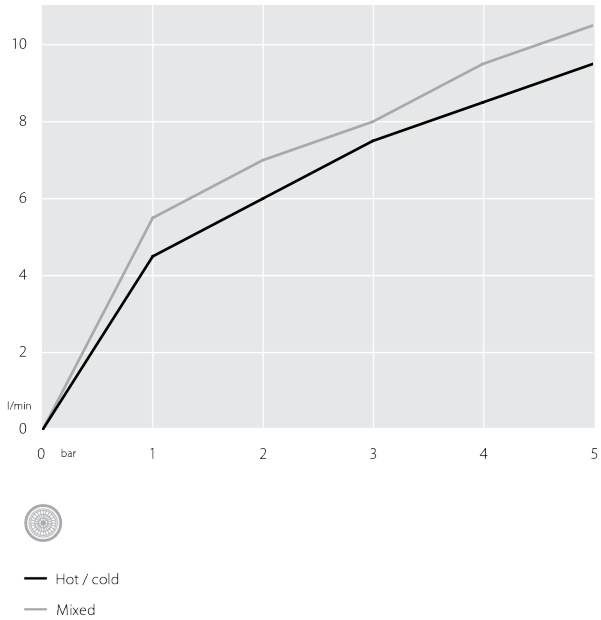

The article covered by this data sheet may not have all Nobili certificates