CUCINA
NU12113/6CR

NOBILI®
The Best Technology for Water

Image

Technical drawing

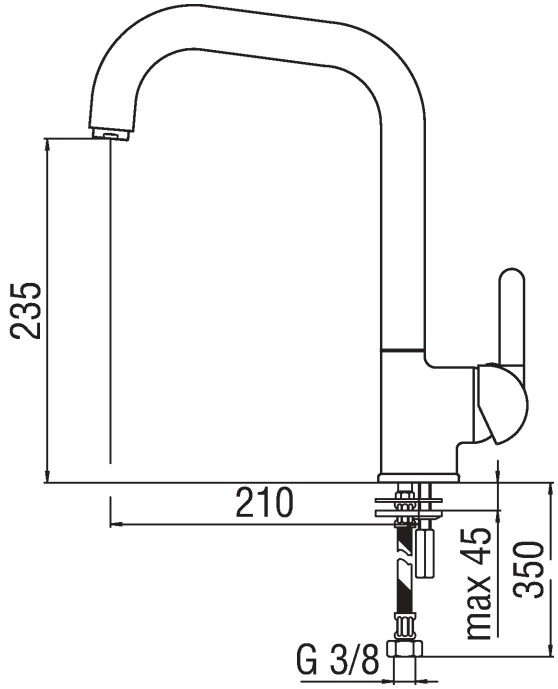

Specifications

NUVOLA
Single control
Finish: Chrome
Swivel spout
Packaging: 41,5 x 16 x 7,5 cm / 0,00498 m^3 / 2,12 kg

Flow rate diagram

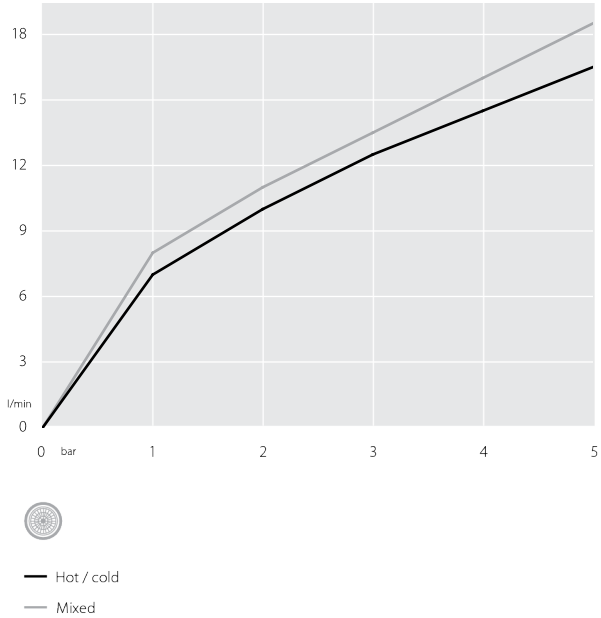

The article covered by this data sheet may not have all Nobili certificates