OZ T2
OZ100/T2CR

NOBILI®
The Best Technology for Water

Image

Technical drawing

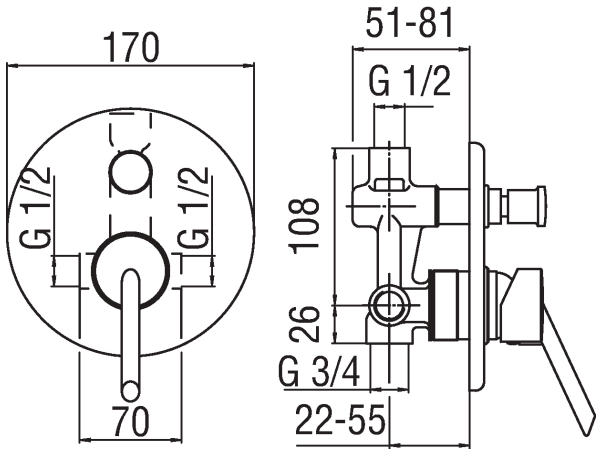

Specifications

Shower
Flush fit single control
Finish: Chrome
2-way outlet
Automatic deviator
Built-in part included
Cartridge ø 40 mm
Dynamic flow limiter (-50%)
The temperature limiter
Packaging: 16,5 x 21,5 x 17,1 cm / 0,006066 m^3 / 2,15 kg

Flow rate diagram

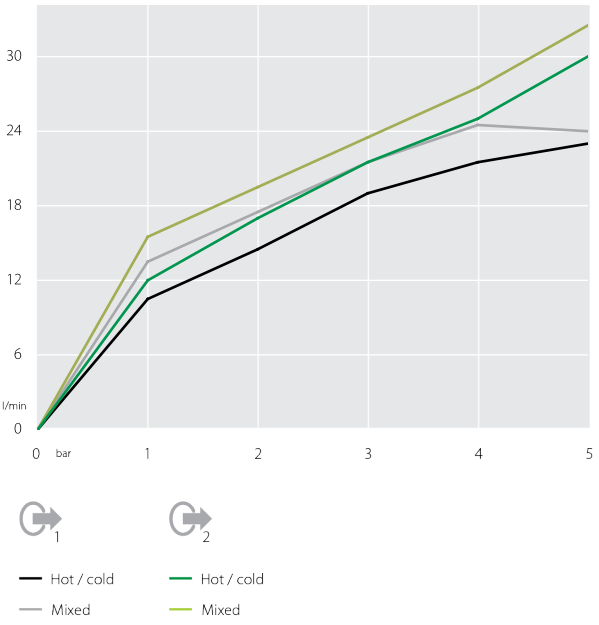

The article covered by this data sheet may not have all Nobili certificates