CUCINA
OZ117/8T2SA

NOBILI®
The Best Technology for Water

Image

Technical drawing

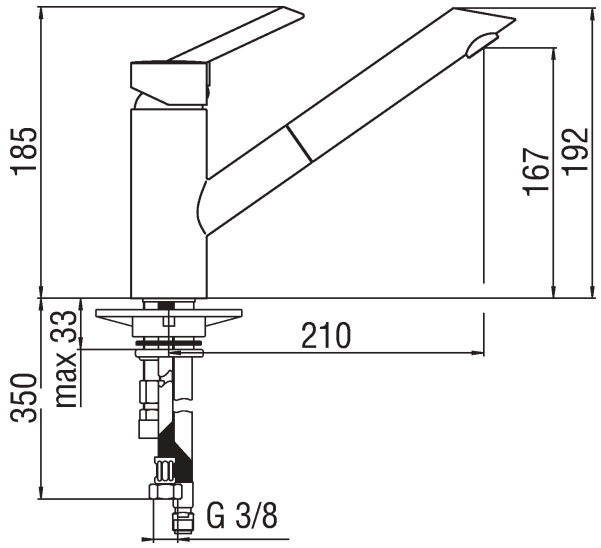

Specifications

OZ T2
Single control
Finish: Satin finish
Swivel body
Pull-out single jet hand shower
Packaging: 41 x 21 x 7 cm / 0,006027 m^3 / 2,6 kg

The article covered by this data sheet may not have all Nobili certificates