SPRING
SP00010/2CR

NOBILI®
The Best Technology for Water

Image

Technical drawing

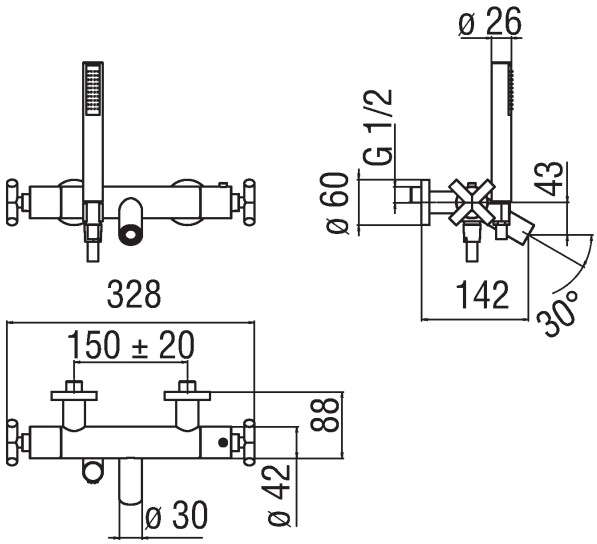

Specifications

Tub
External thermostatic mixer with duplex
Finish: Chrome
38° C safety cut-out
Non-return valves
Anti limescale system
Fixed hand shower support
Single jet hand shower
150 cm hose
Diverter included into the handle
Thermostatic cartridge
Fluhs lifetime deviator cartridge 180°c.
Aerator Neoperl® caché M 24 x 1
Packaging: 41 x 21 x 7 cm / 0,006027 m^3 / 4 kg

Flow rate diagram

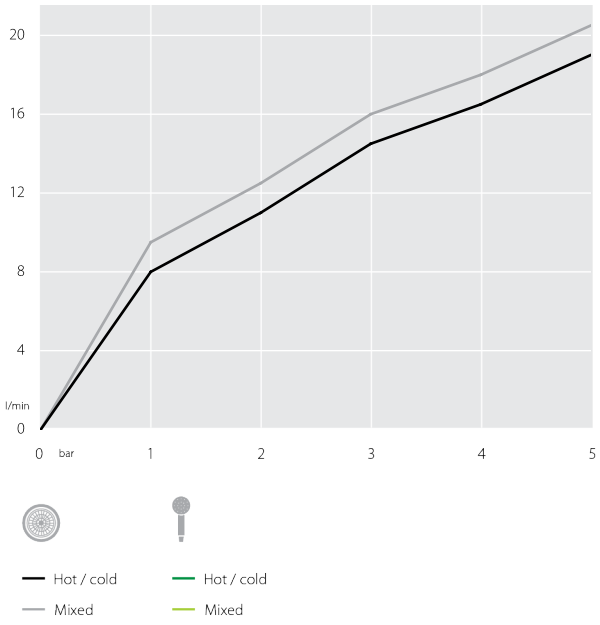

The article covered by this data sheet may not have all Nobili certificates