TOWER
TW00118/1CR

NOBILI®
The Best Technology for Water

Image

Technical drawing

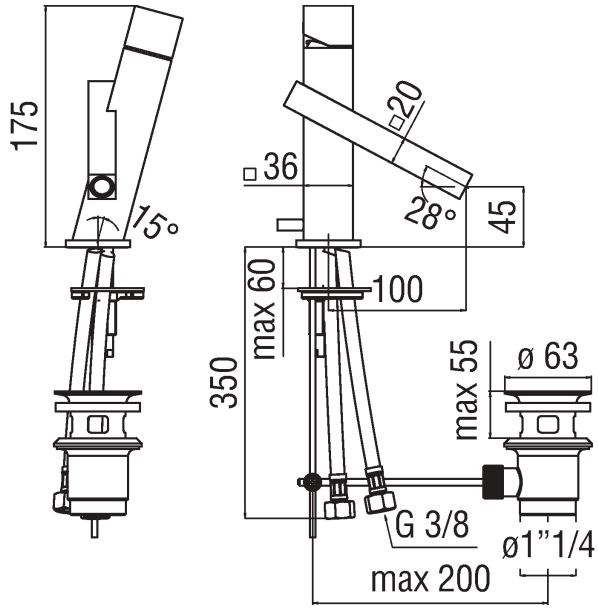

Specifications

Washbasin
Single control
Finish: Chrome
Cartridge ø 25 mm
Aerator Neoperl® caché M 16,5 x 1
Flexible Parigi® SPX® stainless steel ø 3/8"
Packaging: 41,2 x 16,4 x 7,1 cm / 0,004797 m^3 / 2,4 kg

Flow rate diagram

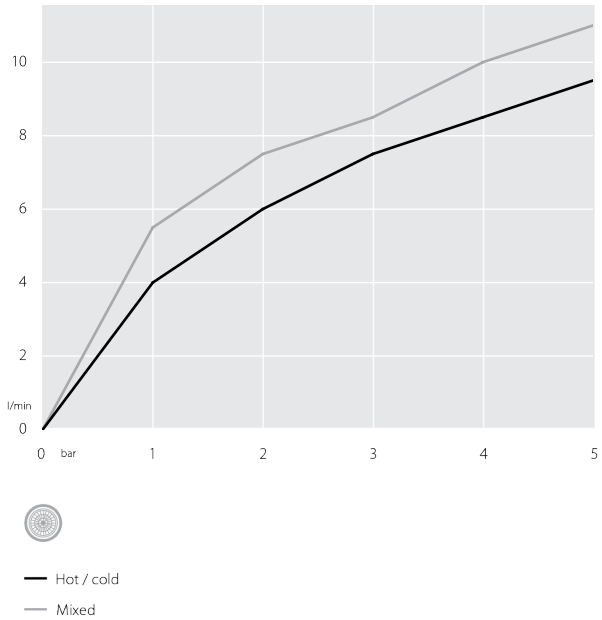

The article covered by this data sheet may not have all Nobili certificates